SIMGASM B.V. Copyright

SIMGASM

Universal Seat Slider

Assembly Guide

SLU24

SIMGASM B.V. Copyright

CHOOSE YOUR SEAT

Identify the slider parts on page 3, then follow the route for your seat.

CORE RECLINE / CORE BUCKET

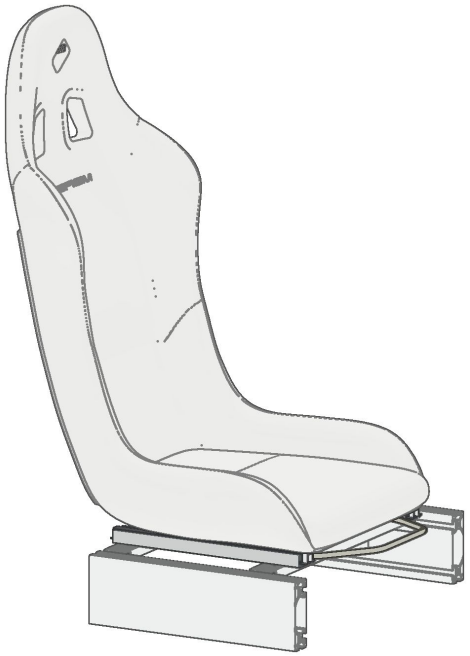

The rails bolt directly to the underside of the seat.

Route A / Pages 4 – 8

ATLAS



The seat bolts to side brackets on top of the rails.

Route B / Pages 9 – 12

SIMGASM B.V. Copyright

IDENTIFY THE PARTS

Identify the top and bottom of each rail before positioning any bolts.

RAIL PAIR AND RELEASE HANDLE

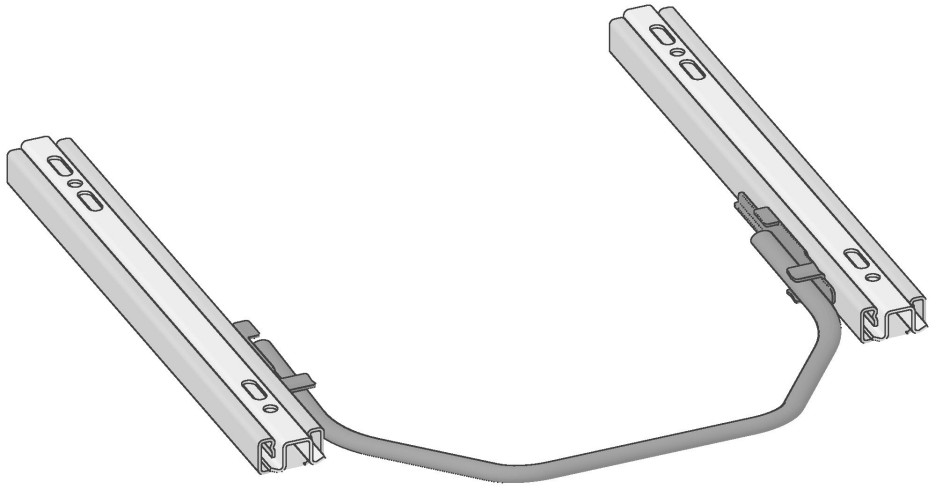

FIND AND PRESS THE SIDE RELEASE

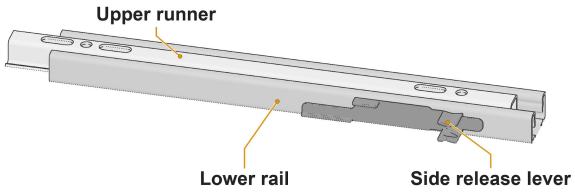

INSIDE FACE OF THE RAIL

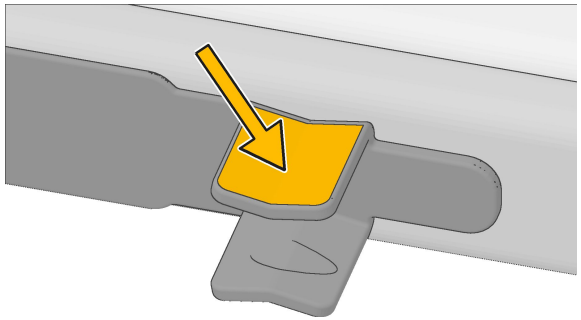

PRESS AND HOLD HERE

SLIDER SET

- Find the two locking rails and the U-shaped handle. The lower rails sit on the cockpit's front and rear seat supports.
- The upper runners carry the seat or its side brackets. Moving a runner uncovers the bolt holes inside the rail.
- With the handle off, press and hold the lever on the inside face of one rail. Slide the two sections of that rail until the mounting hole is visible. Let go to lock it.

HARDWARE FOR YOUR ROUTE

For the chassis, set aside four through-bolts and four matching nuts. For a Core seat, use its four bottom-mount bolts. For an Atlas, also have the side brackets and their mounting hardware ready.

SIMGASM B.V. Copyright

A1 MATCH THE SEAT HOLES

Core Recline and Core Bucket / Choose the correct pair of holes before fitting either rail.

ALIGN THE RAIL BESIDE THE SEAT

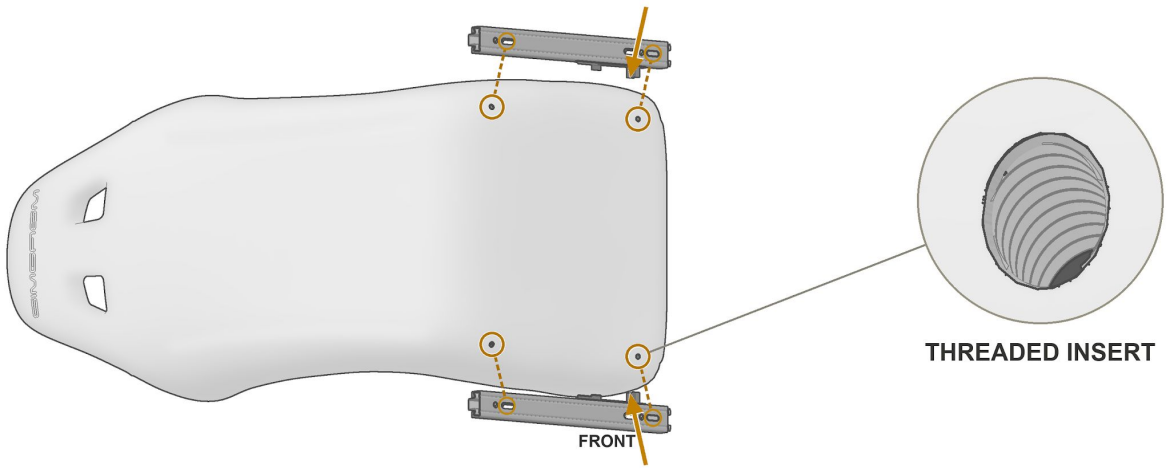

PRESS THE SIDE RELEASE

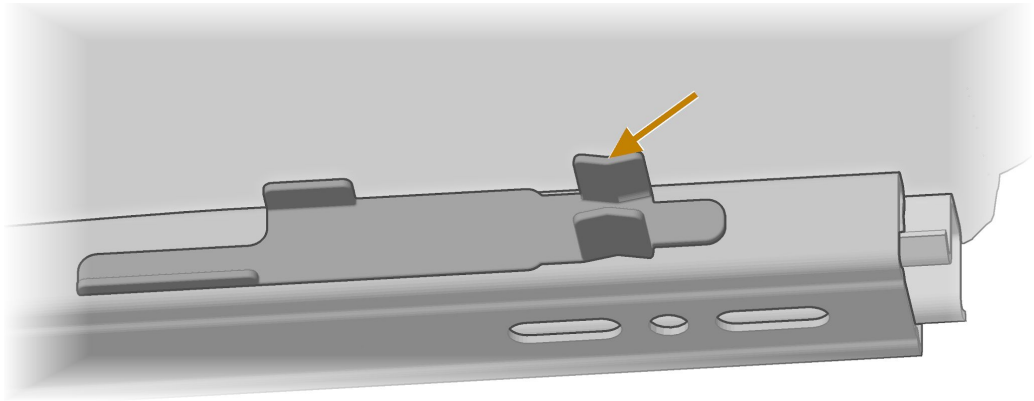

CORE / HOLE SELECTION

- Support the seat upside down on a padded surface. Identify the front edge of the seat and its rear mounting points.
- Hold one rail alongside the seat, with the handle end at the front and the release lever facing inward. Match a rear hole, then check which front hole lines up.
- Press and hold the inner release lever. Slide the rail rearward until the rear seat-mounting hole is visible. Align it with the chosen rear insert.

CHECK BOTH HOLES

If the seat bolts are already fitted, remove the four from the matching inserts and reuse them for the rails. Leave the other inserts as they are.

SIMGASM B.V. Copyright

A2 BOLT THE RAILS TO THE SEAT

Core Recline and Core Bucket / Finish one rail before starting the other.

REAR BOLT / START THE THREAD

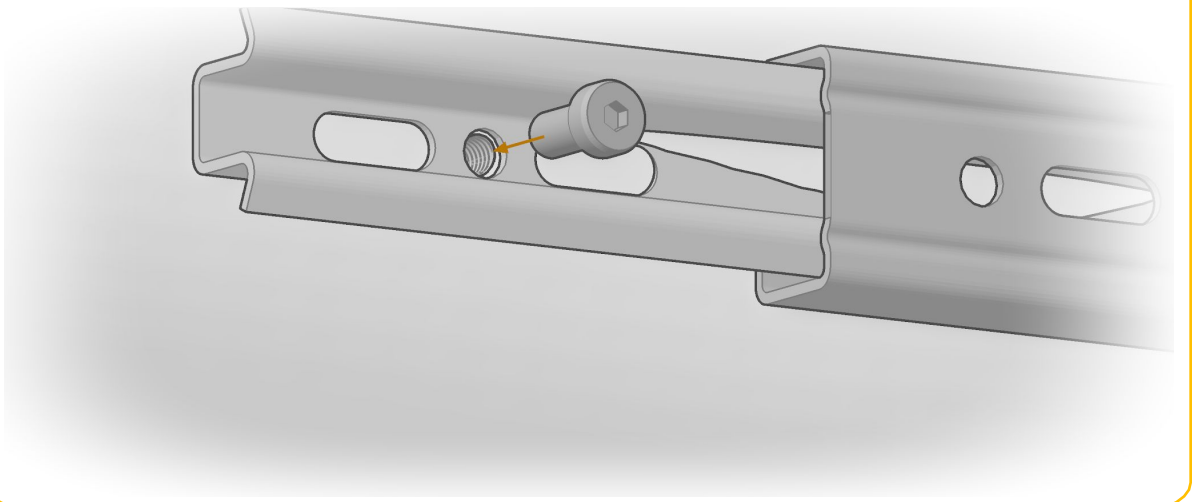

TIGHTEN THE FRONT BOLT, THEN RETURN TO THE REAR

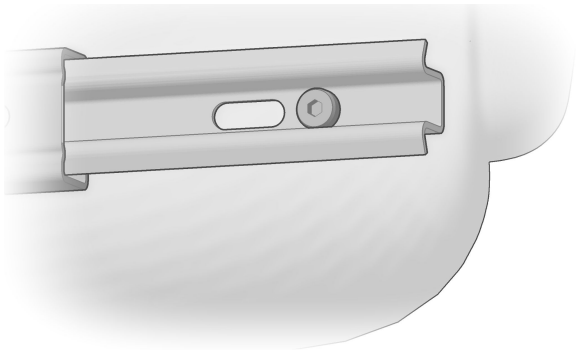

1. TIGHTEN THE FRONT BOLT

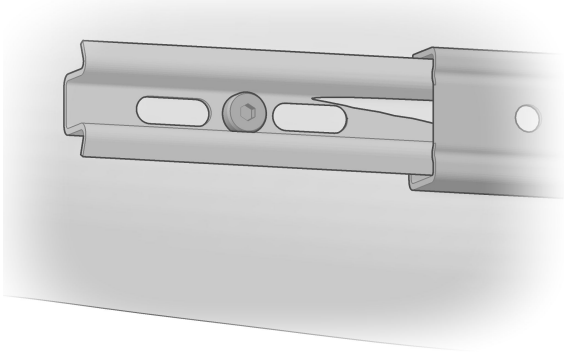

2. TIGHTEN THE REAR BOLT

CORE / SEAT BOLTS

- Feed the rear bolt through the rail and into the seat's threaded insert. Start it by hand and leave it loose enough to line up the front hole.
- Press the side release and slide the rail the other way until the chosen front hole is clear. Insert and tighten the front bolt.
- Slide the rail back, then fully tighten the rear bolt. Repeat this sequence on the other side.

BEFORE FITTING THE HANDLE

Check that all four bolts are secure and that both runners can move when their side levers are pressed.

SIMGASM B.V. Copyright

A3 CONNECT THE HANDLE

Core Recline and Core Bucket / Set both runners to the same position first.

MATCH THE RUNNERS AND CONNECT THE HANDLE

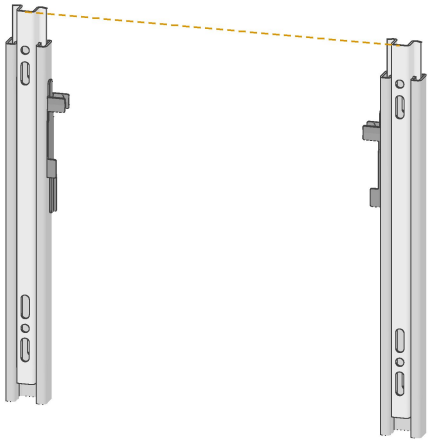

MATCH THE LOCKING NOTCHES

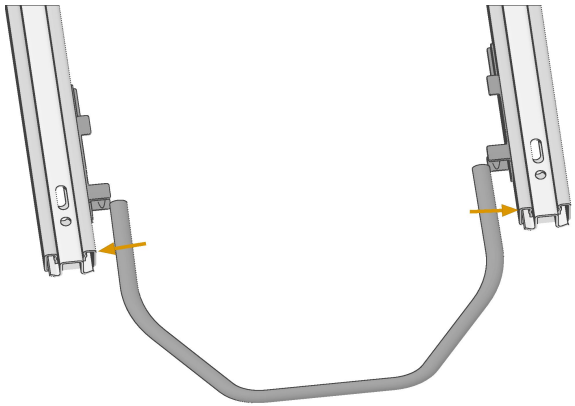

SPREAD THE HANDLE ENDS

HANDLE BEND FACES UP

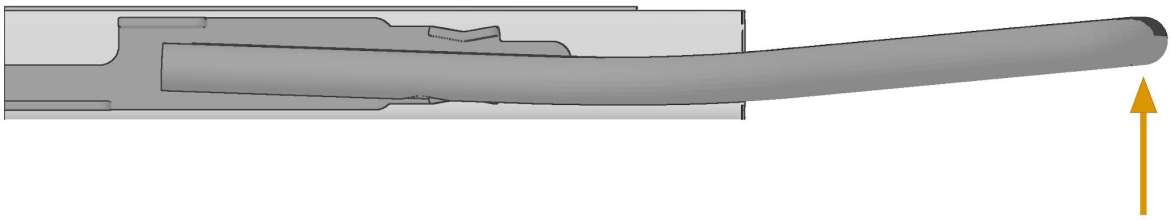

CORE / RELEASE HANDLE

- Press each side lever in turn. Move both runners to the same locking notch. Check that the same length of rail extends from a common end.
- At the front of the seat, spread the handle ends slightly. Engage each end with the release lever on the inside face of its rail. The handle's spring tension keeps both ends engaged.
- Orient the bend upward when the seat is upright. Lift the handle and check that both runners release together.

CHECK THE CLEARANCE

The raised bend leaves room for your hand above the floor and cockpit brackets. Release the handle and check that both rails lock again.

SIMGASM B.V. Copyright

A4 MOUNT THE SEAT ON THE CHASSIS

Core Recline and Core Bucket / The fixed lower rails bolt to the cockpit.

CENTRE THE SEAT ON THE COCKPIT

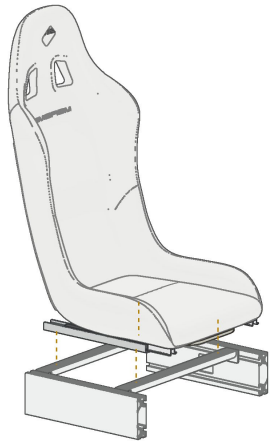

PLACE THE SEAT AND RAILS

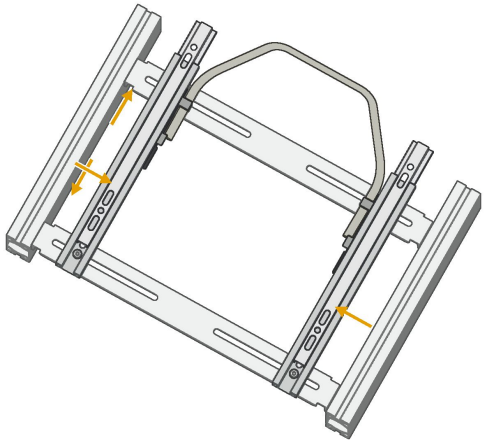

ADJUST THE SUPPORT SPACING

THROUGH-BOLT AND NUT

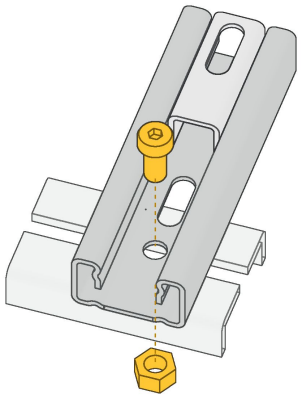

CORE / CHASSIS BOLTS

- Place the seat and rails on the front and rear chassis supports. If needed, move a support forward or back until its slots line up with both rails.
- Lift the handle and move the seat forward to expose the rear chassis holes. Insert a bolt from inside each rail down through the support. Start a nut underneath.
- Centre the seat. Move it back to expose the front holes and fit the other two bolts and nuts. Keep the rails parallel, then tighten all four and secure the supports.

BEFORE MOVING THE SEAT

Check that each nut is seated beneath the chassis support. Keep the bolt heads inside the rail channels clear of the moving runners.

SIMGASM B.V. Copyright

A5 CHECK TRAVEL AND LOCKING

Core Recline and Core Bucket / Test the mounted seat before use.

MOVE THE EMPTY SEAT THROUGH ITS FULL TRAVEL

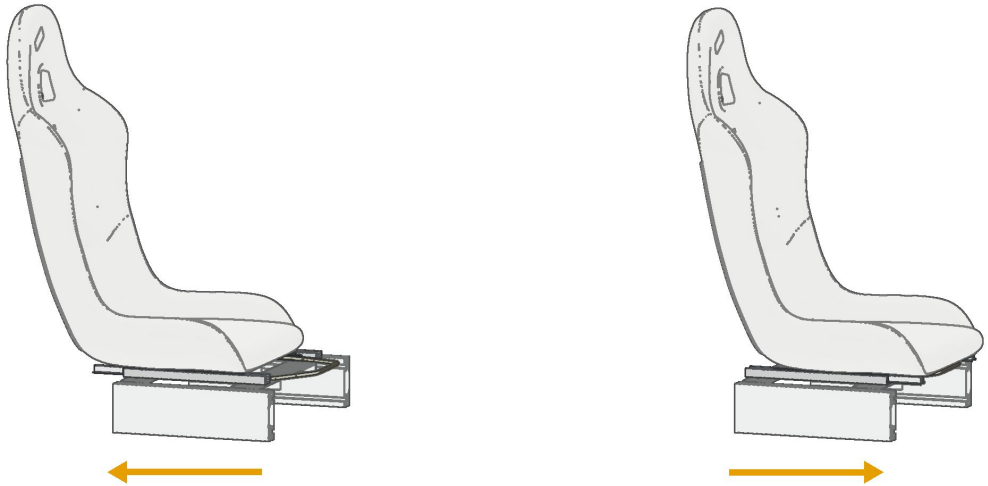

RELEASE THE HANDLE AND CHECK BOTH LOCKS

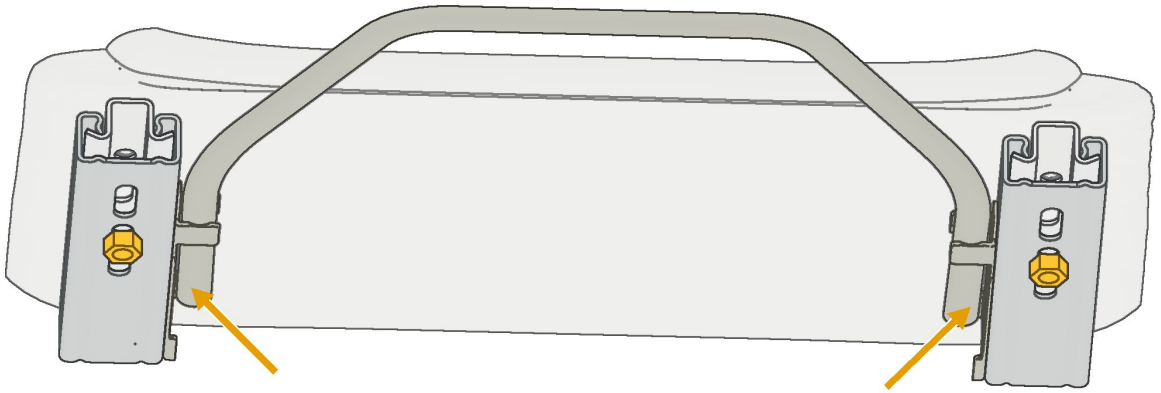

CORE / FINAL CHECK

- Lift the handle and move the empty seat fully forward and back several times. Check that the handle, rail bolts and chassis brackets clear each other.
- Release the handle at several positions. Gently push and pull the seat to check that both sides lock at the same notch.
- Recheck the four bolts between the rails and the seat and the four through-bolts and nuts at the chassis supports.

INITIAL RESISTANCE

A new slider can feel firm because its close fit limits play. Movement normally eases with use. If it catches or only one side locks, recheck the rail alignment, handle engagement and bolt clearance.

SIMGASM B.V. Copyright

B1 FIT THE RAILS TO THE CHASSIS

Atlas / Install the lower rails before the side brackets or seat.

RAILS ON THE FRONT AND REAR SUPPORTS

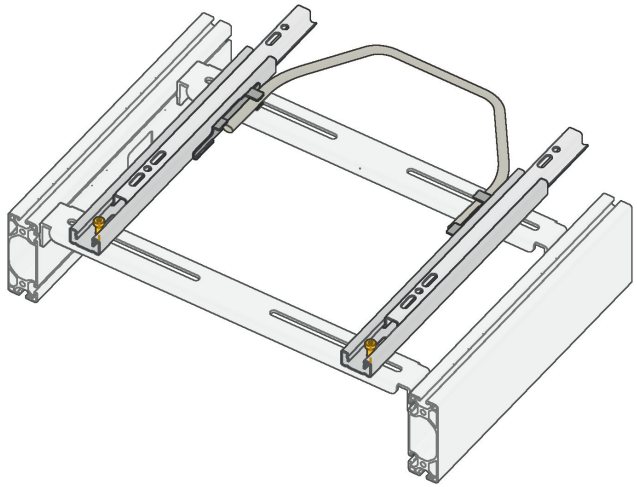

BOLT THROUGH TO THE NUT BELOW

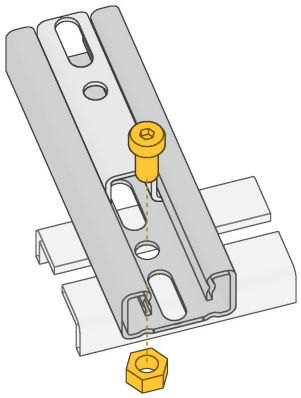

ATLAS / CHASSIS BOLTS

- Lay the rails parallel across the chassis supports. Centre them at the approximate spacing of the Atlas side brackets. Move the supports fore or aft to align their slots.
- Match the runners' locking positions. Spread and fit the front handle with its bend upward, as shown on page 6.
- Lift the handle to move both runners forward for the rear holes, then back for the front holes. At each end, pass two bolts down through the lower rails and supports. Fit nuts below.

KEEP THE RAILS PARALLEL

Centre both rails and tighten the four chassis fasteners. Secure the front and rear supports. Fine-tune the width for the seat using the slots in the side brackets on the next page.

SIMGASM B.V. Copyright

B2 FIT THE ATLAS SIDE BRACKETS

Atlas / Use the slotted feet to adjust the space between the side brackets.

SET THE WIDTH TO MATCH THE SEAT

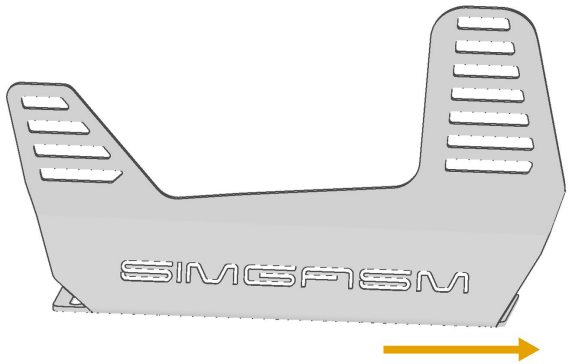

TALL END TOWARDS THE PEDALS

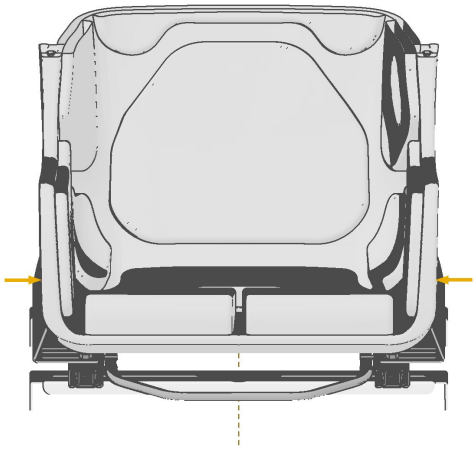

SLIDE TO FIT THE SEAT WIDTH

INSERT THE BOLT FROM INSIDE THE RAIL

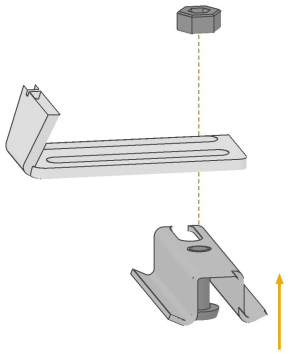

BOLT PATH

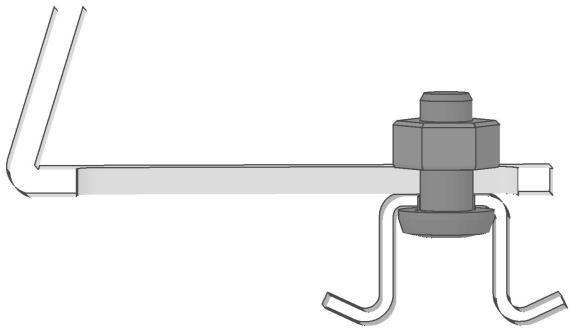

SEATED BOLT AND NUT

ATLAS / BRACKET BOLTS

- Place one bracket on each runner with its taller end towards the pedals. Lift the handle and slide the runners to expose each end. Insert the bolts from inside the rails, up through the slotted feet.
- Fit the nuts above the bracket feet. Leave them just loose enough for the brackets to slide sideways in their slots.
- Support the seat between the brackets to check the width. Slide the brackets sideways until both meet the seat evenly. Centre the seat, then tighten the four bracket-to-rail fasteners.

CHECK THE FIT

Make sure the seat's side mounting holes line up on both sides before tightening. The brackets should sit flat on the rails and meet the seat without pulling it sideways.

SIMGASM B.V. Copyright

B3

FIT THE ATLAS SEAT

Atlas / Mount the seat after both side brackets are in position.

LOWER THE SEAT BETWEEN THE BRACKETS

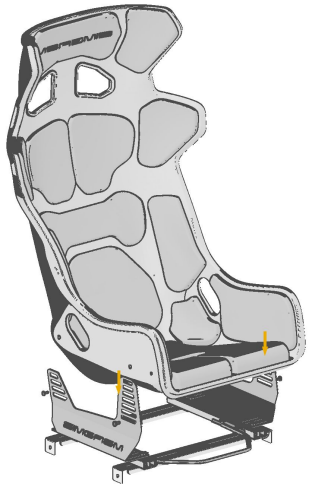

SIDE BOLTS INTO THE SEAT BASE

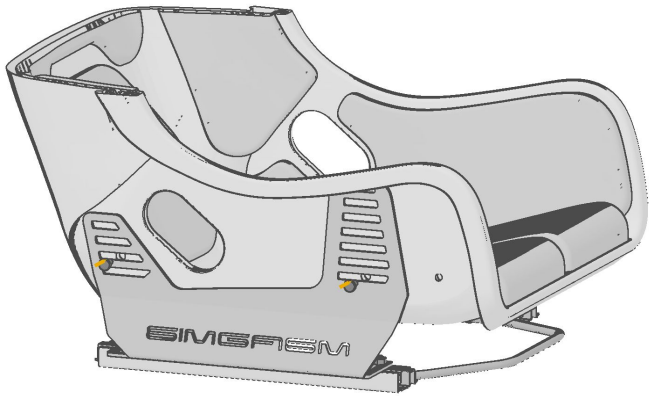

ATLAS / SEAT BOLTS

- Keep the seat supported between the brackets at the width set in the previous step. Line up the side mounting holes for the seat bolts.
- Choose matching front and rear positions on the left and right to set the seat angle. Start the seat's side-mount bolts by hand.
- Centre the seat and check that it sits level from left to right. Tighten the seat bolts on both sides and recheck the bracket-to-rail fasteners.

CHECK BOTH SIDES

Confirm that the left and right bolts use matching positions and that each bolt seats fully. Check the seat and the four side-bracket fasteners before testing the slider.

SIMGASM B.V. Copyright

B4 CHECK TRAVEL AND LOCKING

Atlas / Test the mounted seat before use.

MOVE THE EMPTY ATLAS THROUGH ITS FULL TRAVEL



RELEASE THE HANDLE AND CHECK BOTH LOCKS

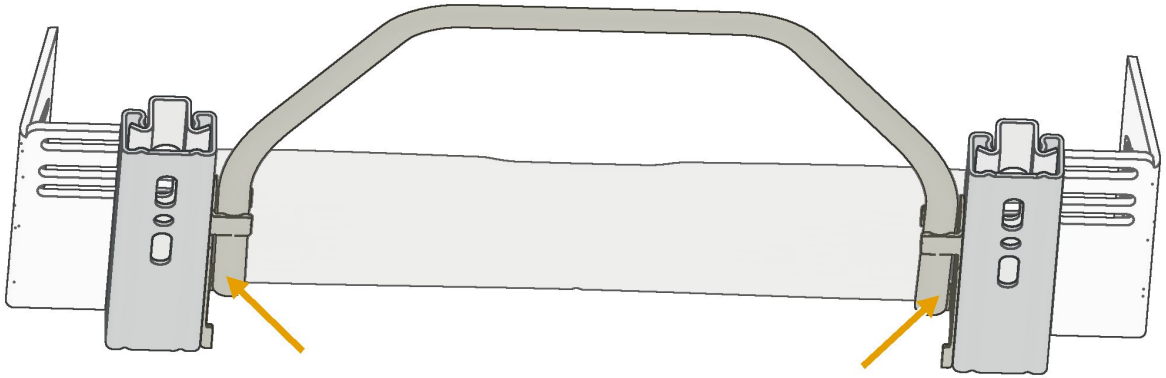

ATLAS / FINAL CHECK

- Lift the handle and move the empty Atlas fully forward and back several times. Check that the rail fasteners clear the runners and the handle clears the frame.
- Release the handle at several positions. Gently push and pull the seat to check that both rails lock together.
- Recheck the four chassis bolts and nuts, the four bracket-to-rail fasteners and the seat's side bolts.

INITIAL RESISTANCE

A new slider can feel firm because its close fit limits play. Movement normally eases with use. If it catches or only one side locks, recheck the rail alignment, handle engagement and bolt clearance.

SIMGASM B.V. Copyright

THANK YOU

FOR YOUR PURCHASE.

Your seat is ready.
Enjoy your first lap.

Go easy on the DMs.
It’s only a seat slider.



SIMGASM B.V. Copyright