Shifter & Handbrake Mounts

Assembly Guide

SP Shifter Plate / HBP Handbrake Plate

SIMGASM B.V. Copyright

CONTENTS

The SP mounts directly to the shifter profile. The HBP is an optional add-on, sold separately.

SP / SHIFTER PLATE

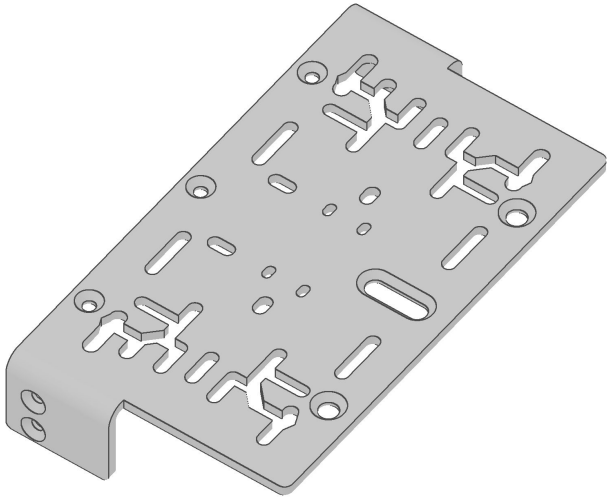

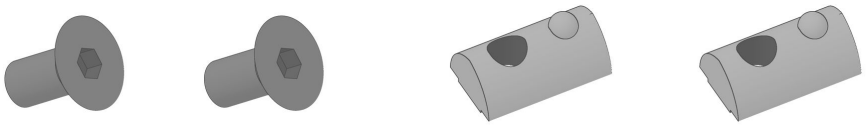

1 × shifter plate
2 × M8 × 16 mm countersunk screws
2 × M8SB spring-ball T-nuts

HBP / OPTIONAL HANDBRAKE PLATE

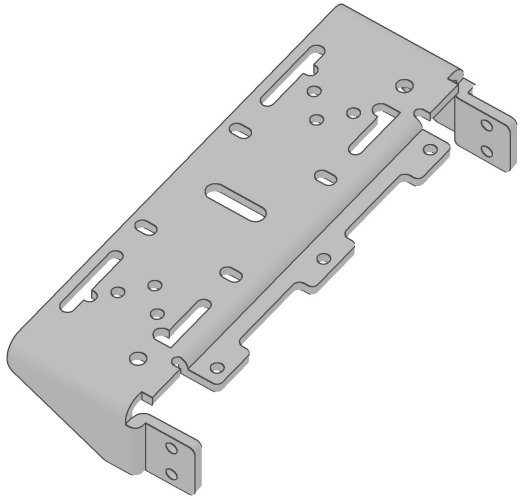



1 × handbrake plate
7 × smaller countersunk screws

IDENTIFY THE SCREWS

Both sets are 16 mm long, measured including the head. The thicker M8 screws fit the two profile T-nuts.

SIMGASM B.V. Copyright

01 CHOOSE THE MOUNTING SIDE

The same SP fits a shifter arm on either side of the cockpit.

OVERHANG TO THE LEFT

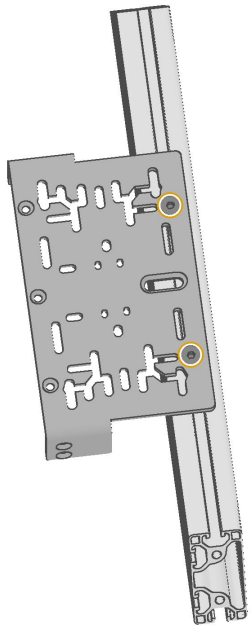

The broad mounting surface can extend to the left of the shifter profile. Keep the countersunk face upwards.

OVERHANG TO THE RIGHT

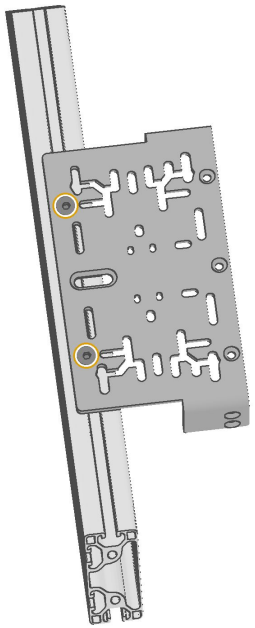

Turn the SP half a turn on the same profile to move the overhang to the right. Keep the countersunk face upwards.

DRIVER'S VIEW

Left and right are as seen from the seat, facing the pedals. Leave room between the controls, the seat and the cockpit upright.

SIMGASM B.V. Copyright

02 MOUNT THE SP STRAIGHT

For a straight installation, use both round countersinks. For an angled installation, see page 5.

ALIGN THE TWO T-NUTS

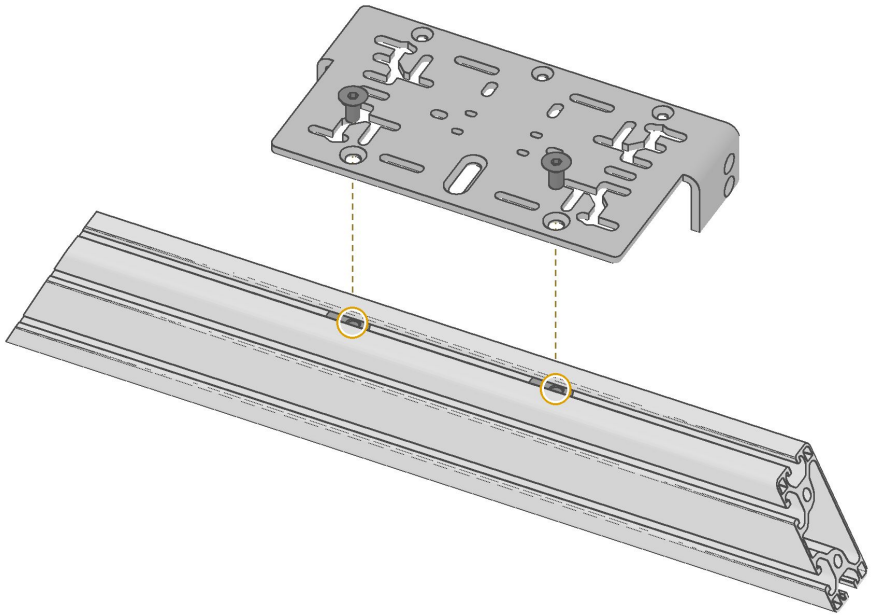

Place both spring-ball T-nuts in the top groove of the shifter profile. Line one up with the front round countersink and the other with the rear one.

FASTEN THE PLATE TO THE PROFILE

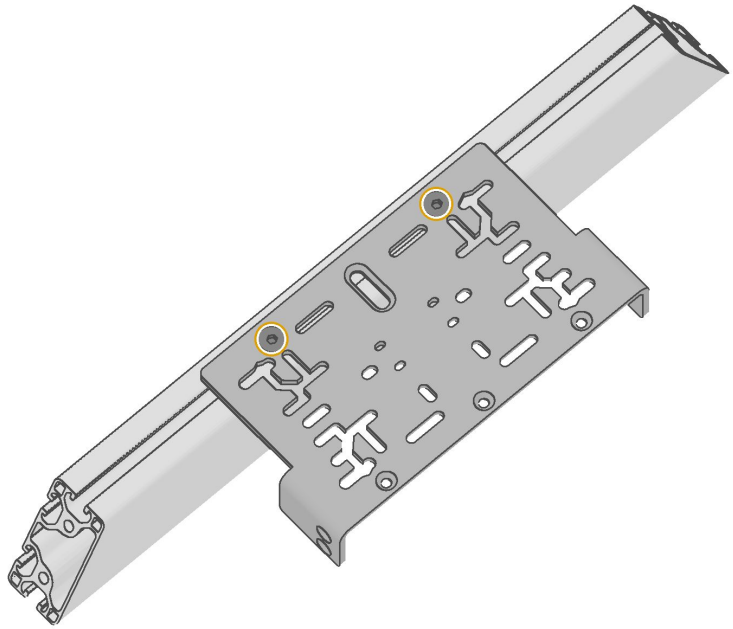

Start both M8 × 16 mm screws from above. Slide the plate to the desired position and tighten both screws evenly.

SP INSTALLATION COMPLETE

Check that both screw heads seat and the SP holds firmly. For the optional HBP, go to page 6. For the shifter alone, go to page 8.

SIMGASM B.V. Copyright

03 ANGLE THE SP

Optional / If the SP is already mounted straight, loosen one screw so the plate can turn around it. Remove the other screw.

USE ONE ROUND HOLE AND THE SLOT

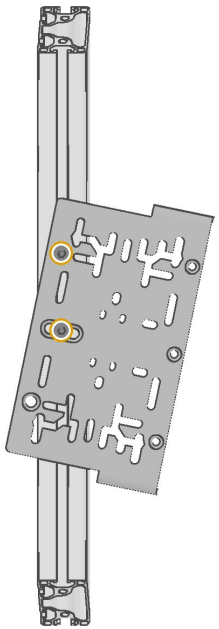

Place both T-nuts in the top groove. Start one M8 × 16 mm screw in a round hole as a pivot. Turn the SP slightly and line up the other T-nut with the central slot.

ROTATE AND TIGHTEN

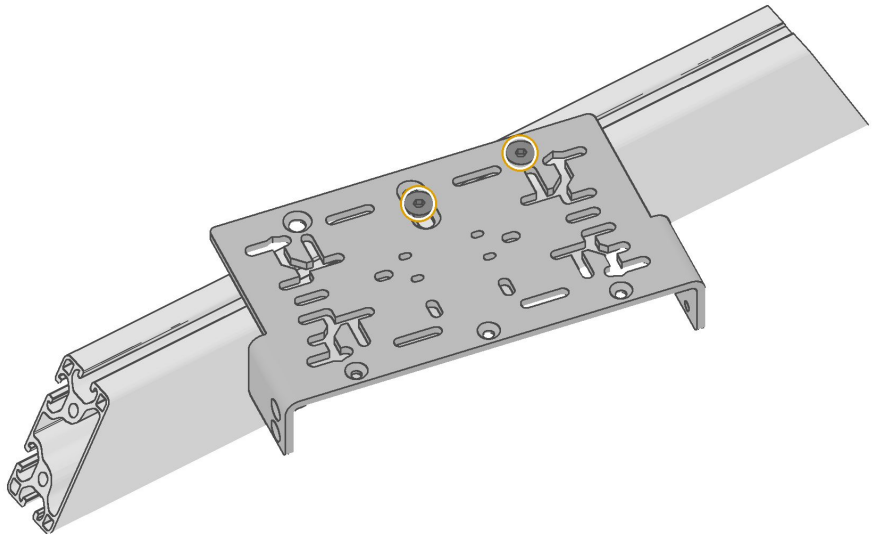

Start the second M8 × 16 mm screw through the central slot. Rotate the SP to the desired angle as viewed from above, then tighten both screws evenly.

SP INSTALLATION COMPLETE

Check that both screw heads seat and the SP holds firmly. For the optional HBP, go to page 6. For the shifter alone, go to page 8.

SIMGASM B.V. Copyright

04 ADD THE OPTIONAL HBP

Follow pages 6 and 7 only if you are adding the handbrake plate.

ALIGN THE LEDGE AND END TABS

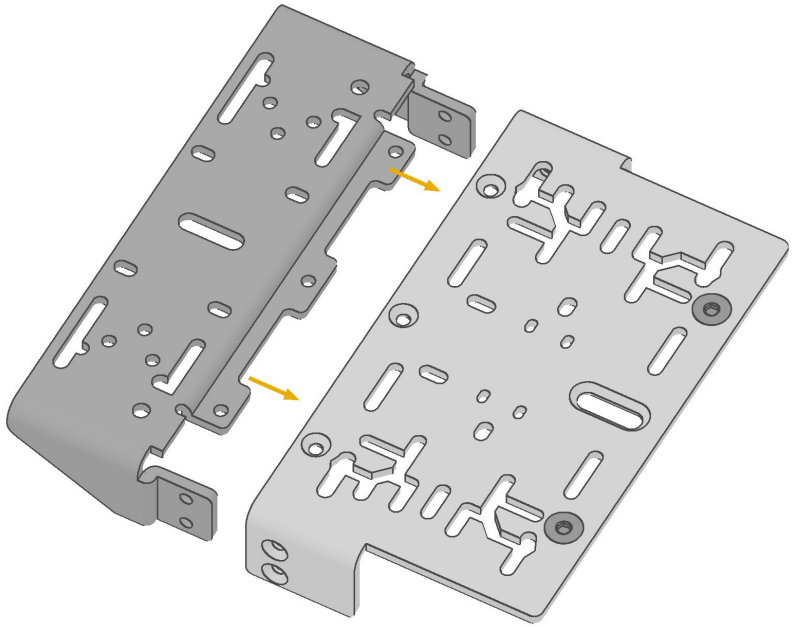

Slide the narrow ledge of the HBP under the free edge of the SP. Tuck the two HBP end tabs inside the turned-down ends of the SP.

START THREE SCREWS FROM ABOVE

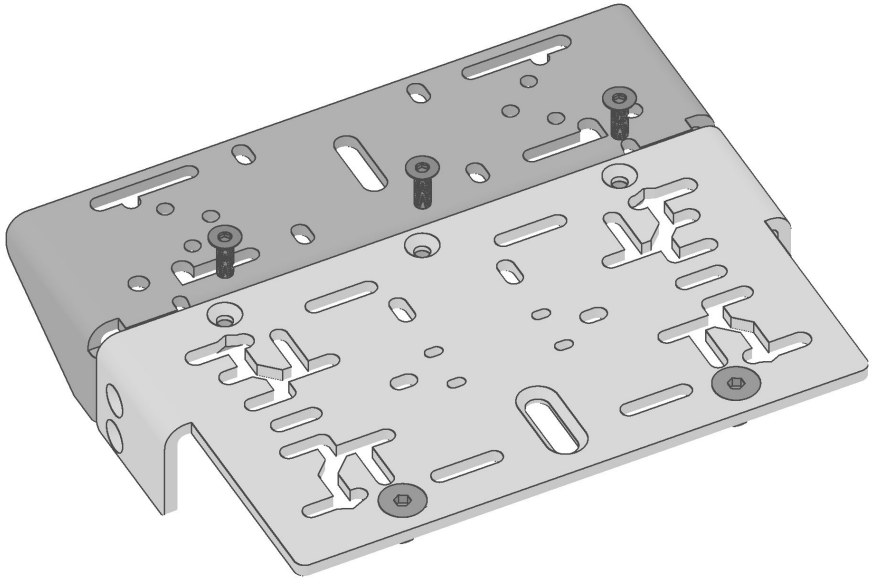

Start three of the smaller 16 mm HBP screws by hand through the top countersinks of the SP and into the HBP. Leave them loose enough to align the end holes.

KEEP THE PLATES ALIGNED

Support the HBP as you fit the screws. The ledge should sit flat against the underside of the SP.

SIMGASM B.V. Copyright

05 SECURE THE OPTIONAL HBP

Optional / Finish the joint before fitting your handbrake.

START TWO SCREWS AT EACH END

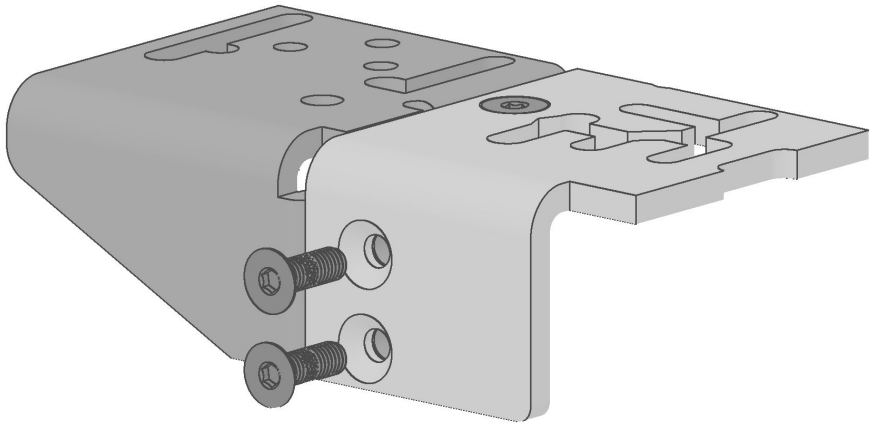

At the front, insert two HBP screws towards the rear. At the rear, insert two towards the front. All four heads face outwards on the SP.

TIGHTEN AND CHECK

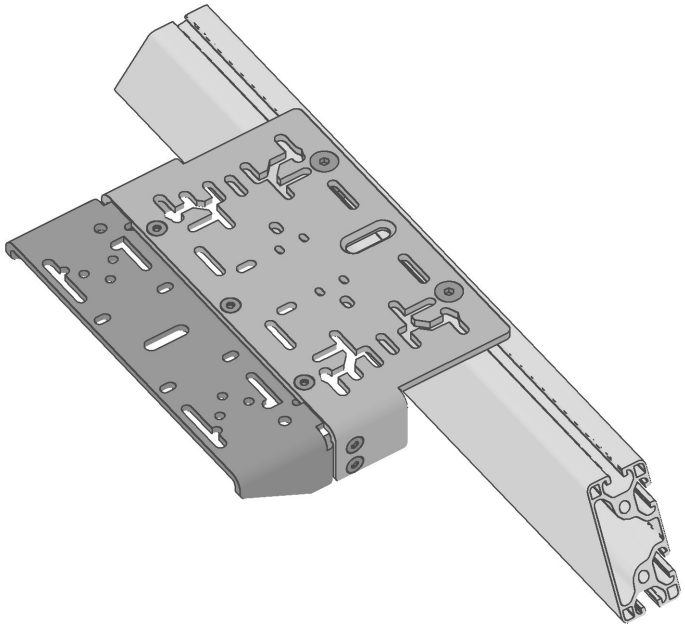

Once all seven HBP screws are started, tighten them evenly, alternating between the top and the two ends. Check that both plates sit firmly together.

CHECK THE HBP MOUNT

Check that all seven HBP screws are tight. Fit your shifter or handbrake on page 8.

SIMGASM B.V. Copyright

06 FIT YOUR SHIFTER OR HANDBRAKE

Line up the control with its mounting slots. If the profile blocks a device bolt, choose an option below.

RAISE THE SP ON SPACERS

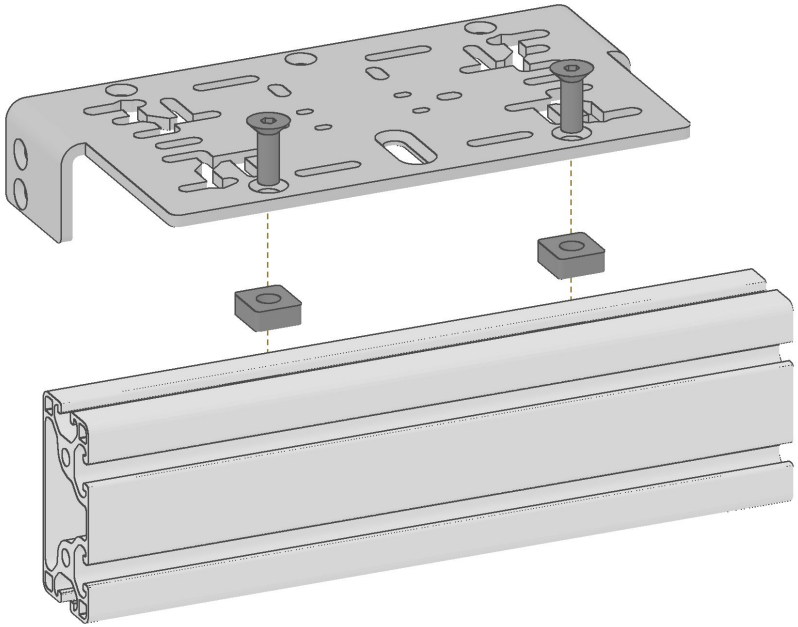

Fit the device bolt before remounting the SP. Place equal spacers between SP and profile at both fixings. Choose M8 screws that engage the T-nuts and clear the groove floor.

USE THE CLEAR DEVICE FIXINGS

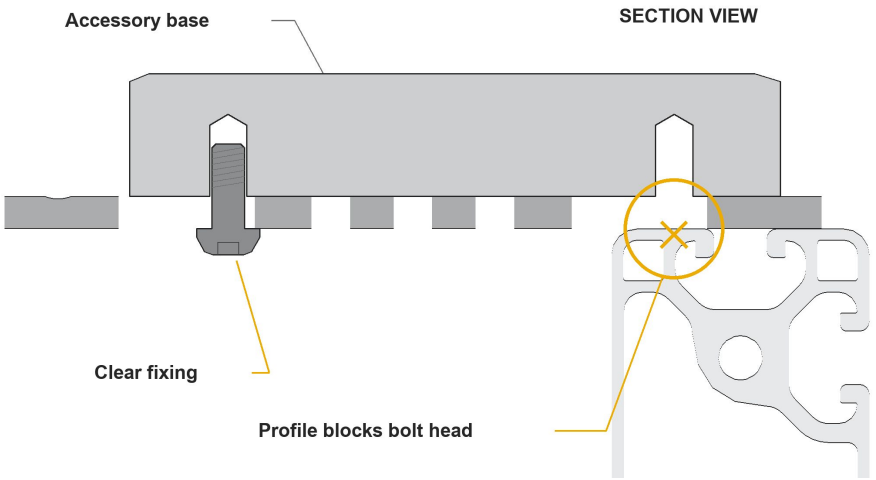

If the device maker allows it, omit only the blocked device bolt. Use at least two well-spaced bolts per control. If more are required, use spacers or another hole pattern.

FINAL CHECK

Check both SP screws and, if fitted, all seven HBP screws. Make sure each control stays firmly mounted and moves freely through its full travel.

SIMGASM B.V. Copyright

THANK YOU FOR YOUR PURCHASE

You might also like these accessories for your simulator.

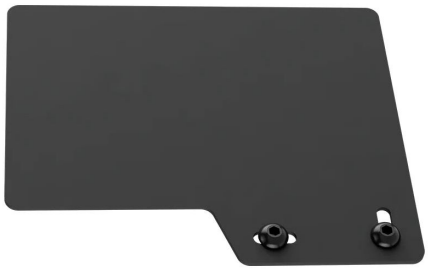

Mouse Tray

Keep your mouse beside the driver's seat.

View product



Keyboard Mount

Bring your keyboard and mouse within reach.

View product



Caster Wheel Set

Move your cockpit when you need the space.

View product



Accessories Hook

Hang your headphones on a cockpit profile.

View product

Explore more accessories at: simgasm.com/collections/sim-racing-accessories

SIMGASM B.V. Copyright