

SIMGASM

Mouse Mount

Assembly Guide

MT / Mouse Tray

SIMGASM B.V. Copyright

CHECK THE KIT

You can use the supplied tray and fixings in all four mounting positions.

IN THE BOX

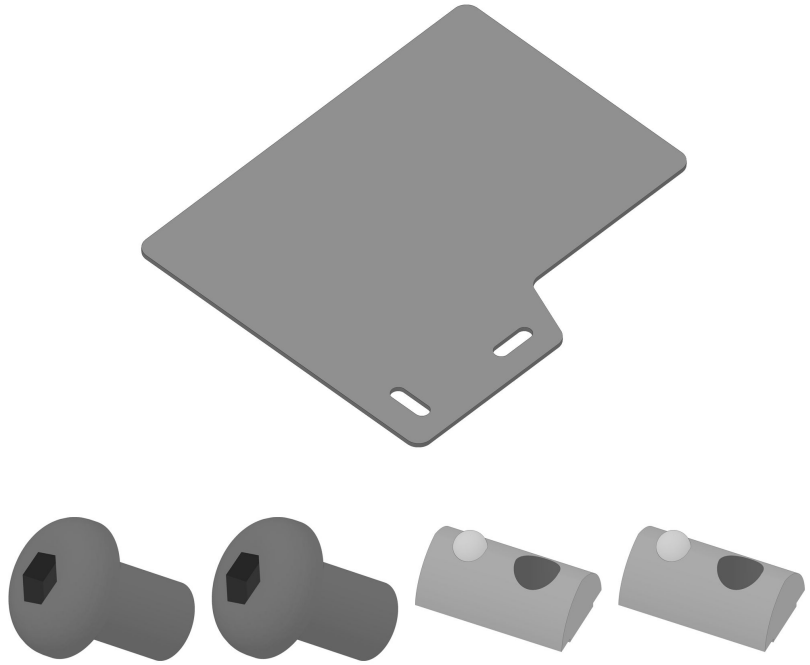

1 × steel mouse tray
2 × M8 × 12 mm button-head screws
2 × SIMGASM M8 spring-ball T-nuts

INSERT THE TWO T-NUTS

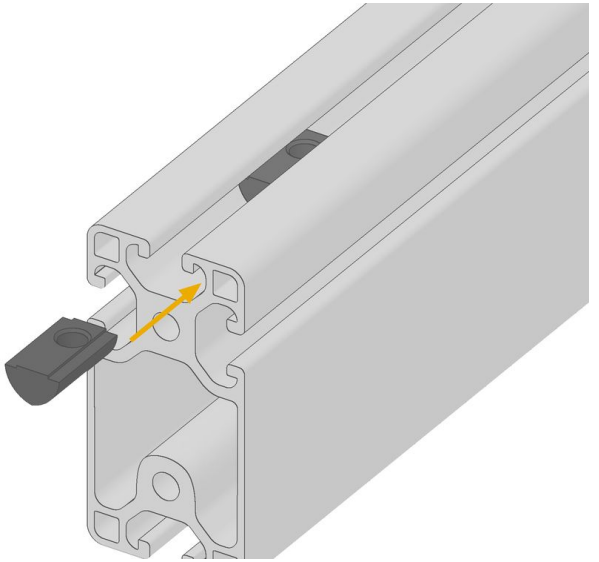

Slide both nuts into one groove from an open end. The spring balls face into the profile and the threaded holes face the tray.

TOOL

Use a 5 mm hex key to tighten the button-head screws.

SIMGASM B.V. Copyright

01 CHOOSE YOUR SIDE

View from above, with the pedals at the top and the seat at the bottom. Choose the side for your mouse hand.

LEFT OF THE SEAT

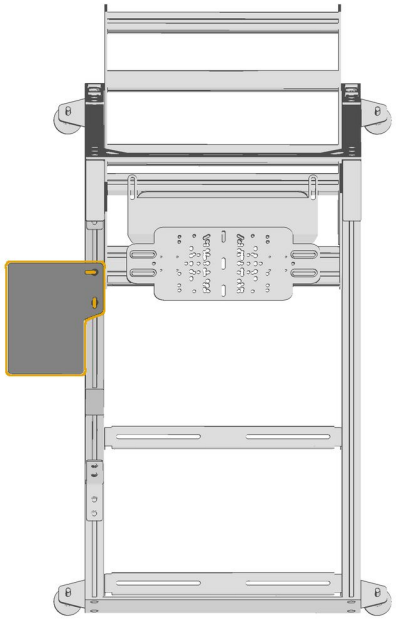

Position the tray beside the left rail. Keep the broad mouse surface clear of the profile.

RIGHT OF THE SEAT

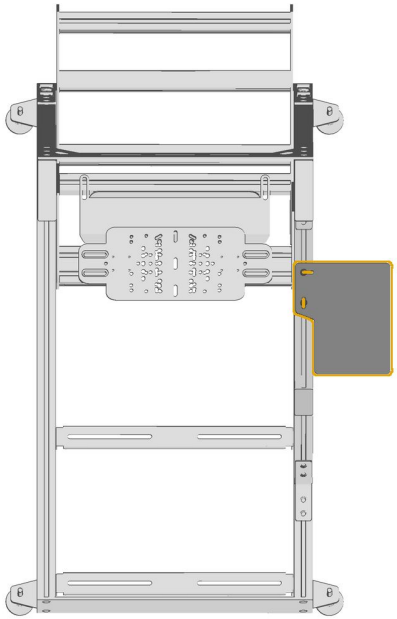

Position the tray beside the right rail. Align both slots in the narrow mounting tab with the same profile groove.

BEFORE YOU FASTEN

Check the tray clears the seat and nearby controls. Either side works with either mounting height.

SIMGASM B.V. Copyright

02 FIT THE TRAY ABOVE OR BELOW

Choose one option. Both screws go through the tray and into the two T-nuts in the same profile groove.

OPTION A / TOP MOUNT

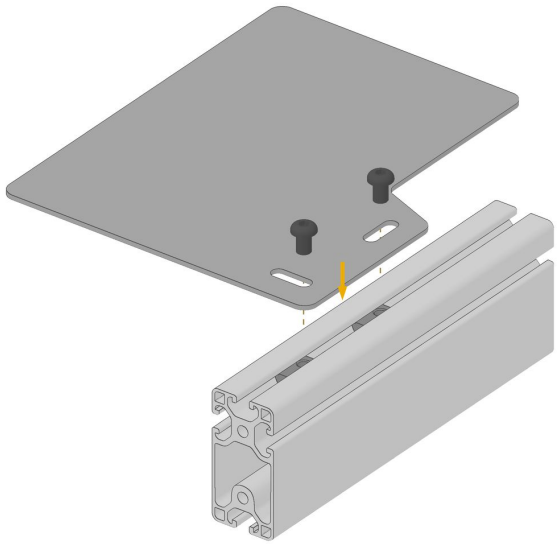

Use the top groove. Rest the mounting tab on the profile and start both screws down through the tray into the T-nuts.

OPTION B / UNDERSIDE MOUNT

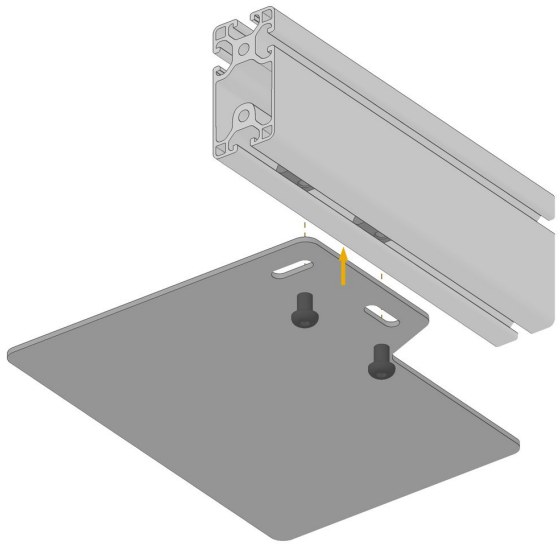

Use the bottom groove. Hold the tab under the profile and start both screws up through the tray into the T-nuts.

START BY HAND

Align one T-nut with each tray slot. Start both screws by hand and leave them loose enough to slide the tray.

SIMGASM B.V. Copyright

OPTIONAL / ADJUST THE ANGLE

Top view. You can angle the tray on either side of the cockpit, whether it sits above or below the rail.

STRAIGHT POSITION

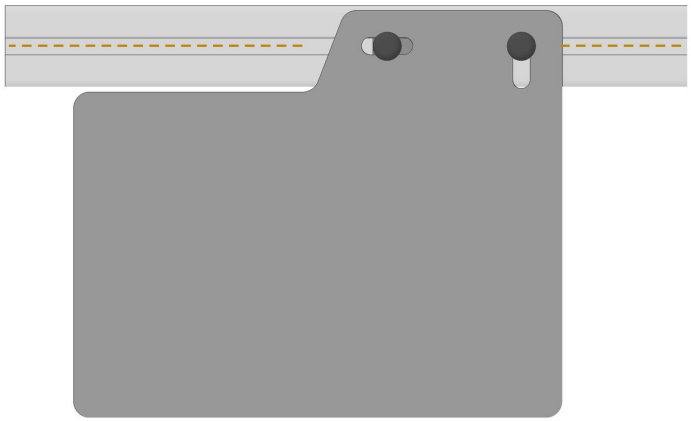

The outer edge of the tray runs parallel to the profile. If you prefer this position, go straight to step 03.

ANGLED POSITION

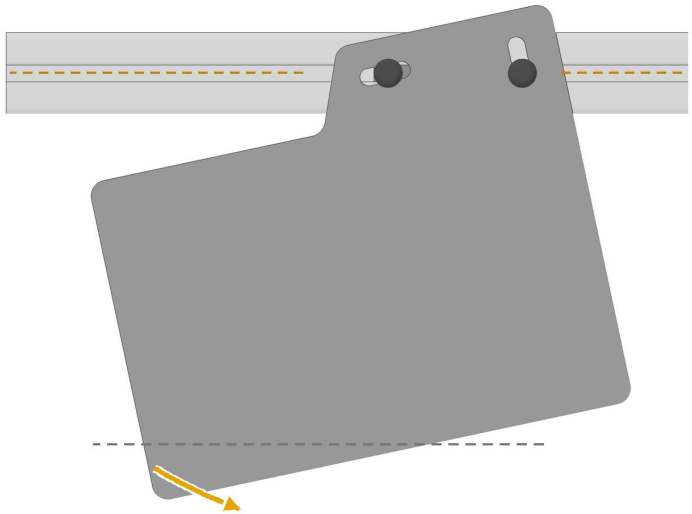

Loosen both screws slightly and keep them threaded into the T-nuts. Turn the tray in its slots. The grey dashed line marks its starting position.

CHECK YOUR CLEARANCE

Check that the tray clears the seat and controls. Leave both screws loose enough to set the reach in the next step.

SIMGASM B.V. Copyright

03 SET THE REACH AND TIGHTEN

Hold the tray at your chosen angle and slide it along the rail until your mouse is within easy reach.

TOP MOUNT / FINAL POSITION

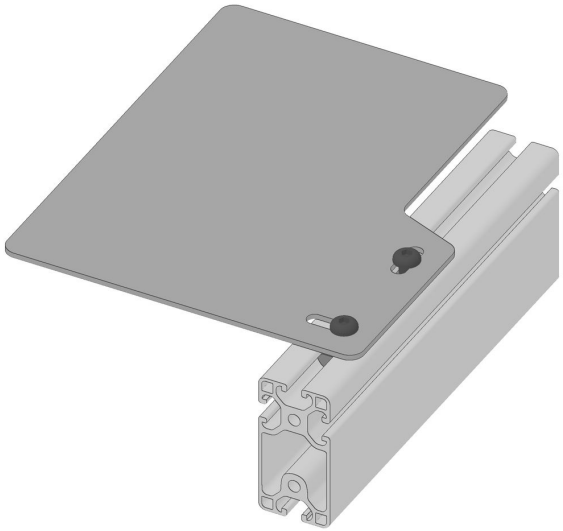

Tighten both screws evenly from above with the hex key.

UNDERSIDE MOUNT / FINAL POSITION

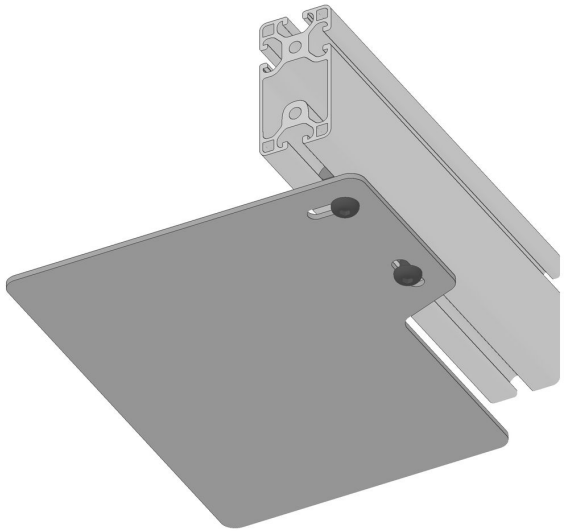

Support the tray with one hand and tighten both screws evenly from below.

FINAL CHECK

Move the mouse across the tray and gently press its outer edge. The tray should stay level and secure.

SIMGASM B.V. Copyright

THANK YOU FOR YOUR PURCHASE

Complete your cockpit with these SIMGASM accessories.



Core Side Mounting Arm

Add a side rail for your mouse mount.

View product



Keyboard Swivel Mount

Keep your keyboard within reach of the seat.

View product



Cupholder

Keep your drink off the mouse tray.

View product



Accessories Hook

Hang your headphones on a cockpit profile.

View product

Explore more accessories at: simgasm.com/collections/sim-racing-accessories

SIMGASM B.V. Copyright