Keyboard Mount
Assembly Guide

KBMA

SIMGASM B.V. Copyright

CONTENTS

Choose a section below or use the printed page numbers to follow the guide.

01 **Build notes and overview**
Page 3

02 **Parts list / packing slip**
Page 4

03 **Choose a side and mount the bracket**
Pages 5–7

04 **Fit the arm and keyboard tray**
Pages 8–9

05 **End cap and final check**
Page 10

06 **Cockpit accessories**
Page 11

WHAT YOU WILL BUILD

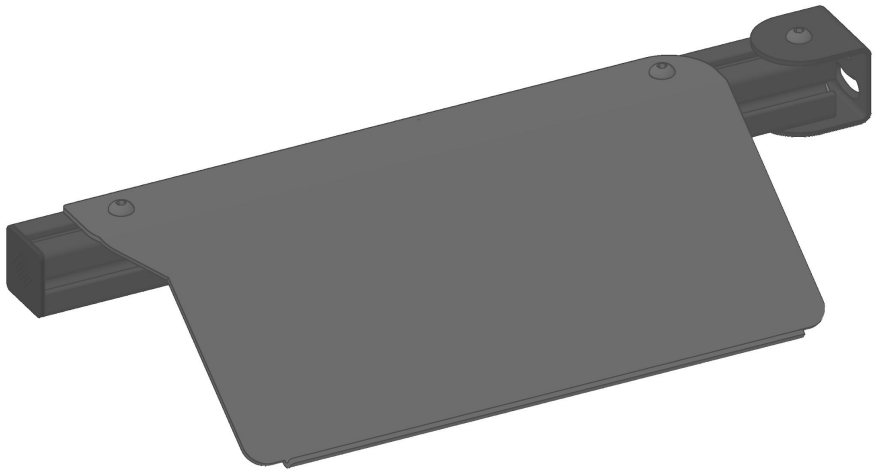

The arm brings the keyboard tray within reach from either side of the cockpit.

FOLLOW THE ASSEMBLY

The six assembly steps run from pages 5 to 10. Select a section above to jump to its first page.

SIMGASM B.V. Copyright

BUILD NOTES

Get to know the mount and its fasteners before you start.

OVERVIEW

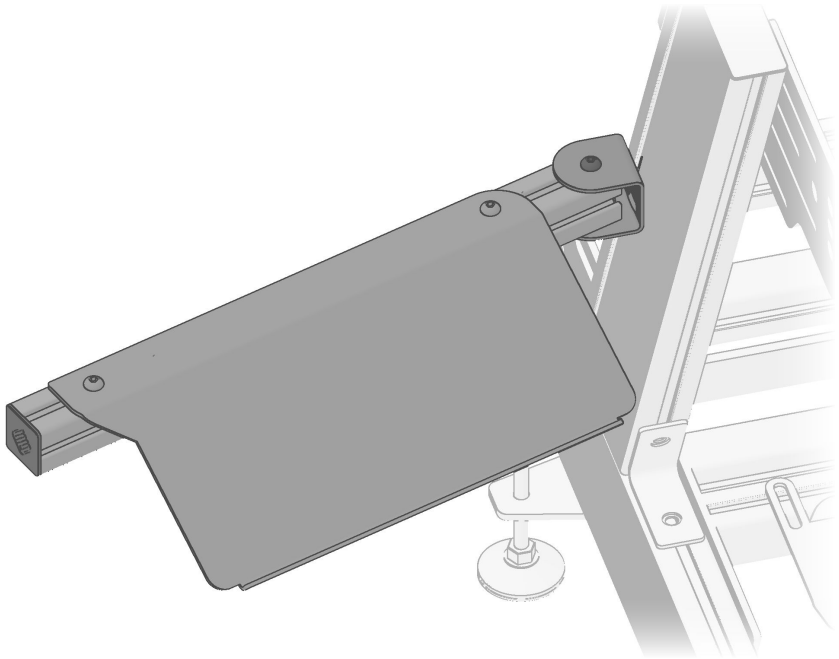

The curved slot lets the U-bracket stay level on a vertical or angled upright. The arm swings horizontally around the two pivot screws.

BEFORE YOU START

TOOLS

Use a 4 mm hex key for the M6 screws and a 5 mm key for the M8 screws. Have a small spirit level ready.

IDENTIFY THE SCREWS

The M6 × 12 mm screws have flat countersunk heads. The M8 × 14 mm screws have rounded button heads.

POSITION THE T-NUTS

Slide a T-nut into the open end of the groove. Its threaded hole faces the screw, with the nut beneath both slot lips.

CHECK LEVEL

Put a spirit level on the upper bracket wing or the profile arm. The keyboard surface has its own built-in typing angle.

SIMGASM B.V. Copyright

PARTS LIST / PACKING SLIP

The first three groups are supplied with the KBMA. Have the profile arm and end cap ready for installation.

MOUNTING PLATES

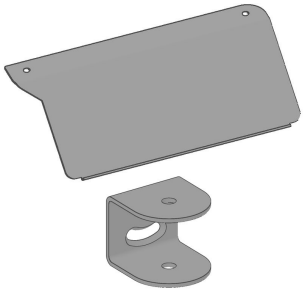

1 × keyboard tray
1 × U-bracket

FRAME FIXINGS

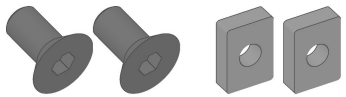

2 × M6 × 12 mm countersunk screws
2 × M6 T-nuts for an 8 mm slot

ARM AND TRAY FIXINGS

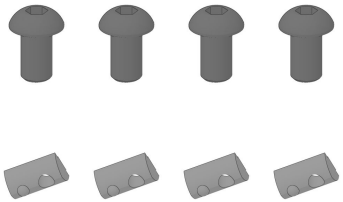

4 × M8 × 14 mm button-head screws
4 × M8 T-nuts

ALSO NEEDED FOR INSTALLATION

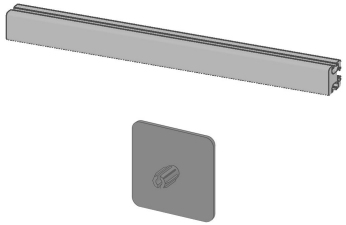

40 × 40 mm profile arm
EC40 end cap

WHERE THE FIXINGS GO

The two M6 screws secure the bracket to the upright. Of the four M8 screws, two secure the arm and two secure the tray.

SIMGASM B.V. Copyright

01 CHOOSE THE MOUNTING SIDE

Decide which side of the cockpit you want the keyboard to swing from.

LEFT-HAND MOUNT

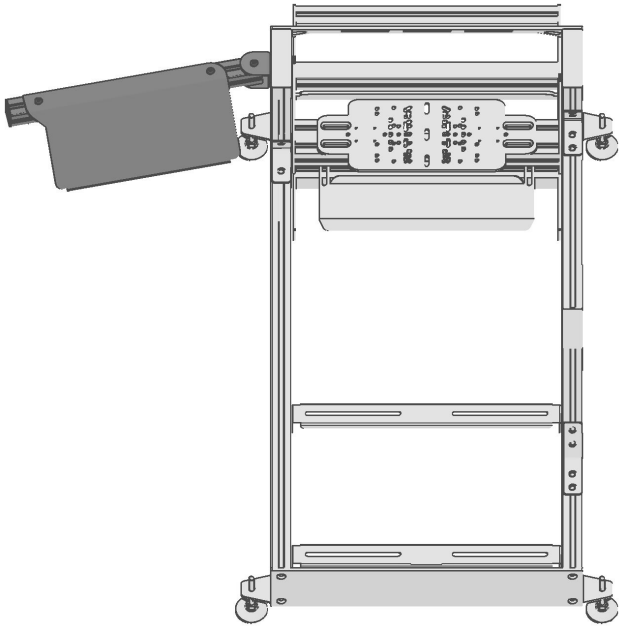

To bring the keyboard in from your left, mount the U-bracket on the outside of the left upright.

RIGHT-HAND MOUNT

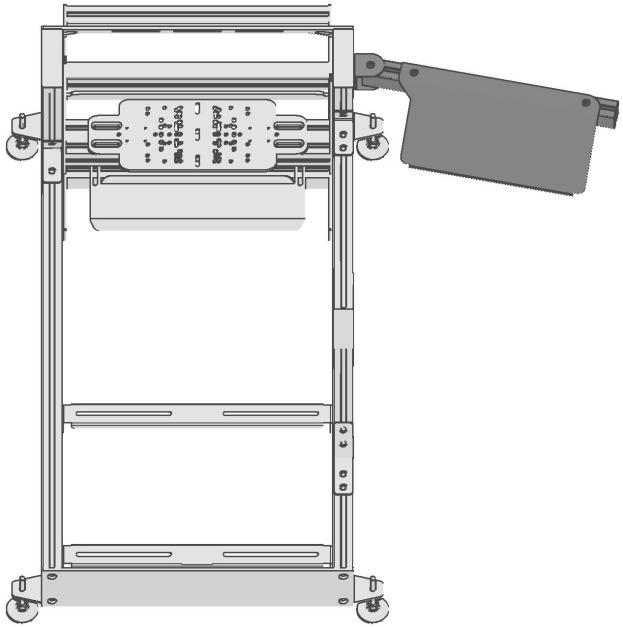

For the right-hand position, fit the same bracket on the outside of the right upright. Keep the round mounting hole above the curved slot.

VIEW FROM THE SEAT

Left and right are as seen from the seat, facing the pedals. Choose a height where the arm can swing clear of the seat and wheel.

SIMGASM B.V. Copyright

02 MOUNT THE U-BRACKET

The upper screw is the pivot. The lower screw sets the angle in the curved slot.

START THE TWO M6 SCREWS

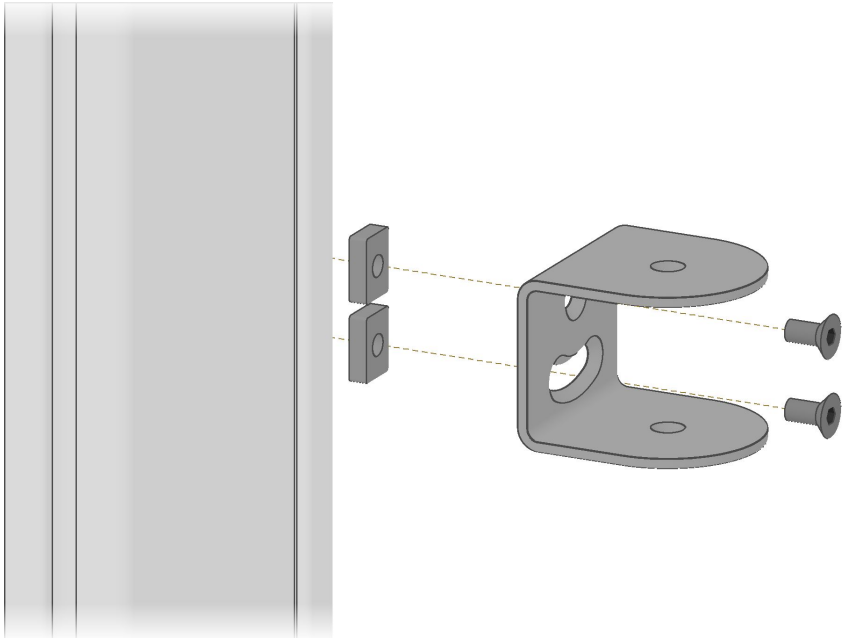

Place both M6 T-nuts in the same upright groove. Start an M6 × 12 mm screw through the upper round hole into one nut. Start the second screw through the curved slot into the other nut.

LEVEL THE BRACKET

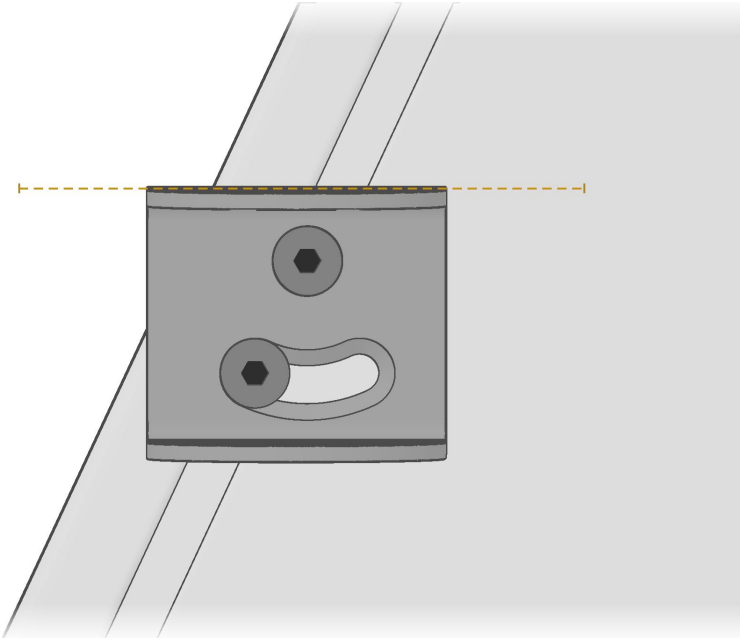

Leave both screws loose enough to turn the bracket around the upper screw. Place a spirit level on the upper wing and rotate the bracket until the wing is horizontal.

BEFORE TIGHTENING

Seat both M6 heads in their countersinks. Check the lower screw position for your upright on page 7 before tightening.

SIMGASM B.V. Copyright

03 SET THE ANGLE FOR YOUR FRAME

The bracket stays horizontal on both frames. The lower screw moves to suit the angle of the upright.

PRO / VERTICAL UPRIGHT

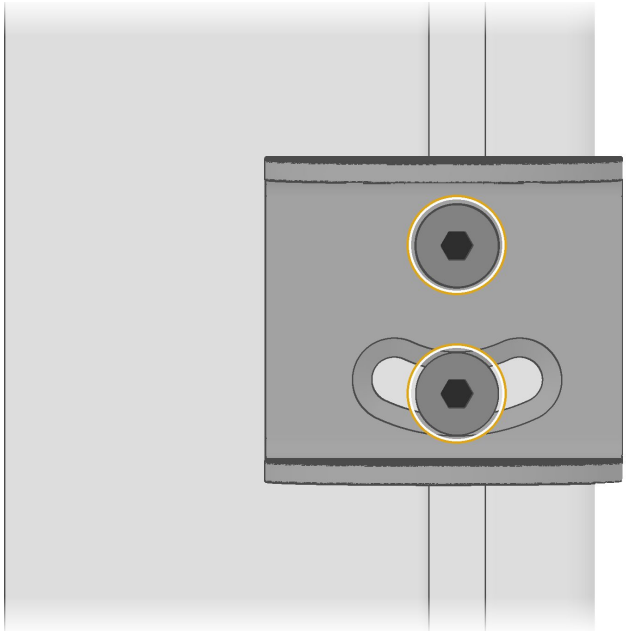

On the vertical Pro upright, the lower screw sits in the middle of the curved slot, directly below the upper screw.

ELITE / ANGLED UPRIGHT

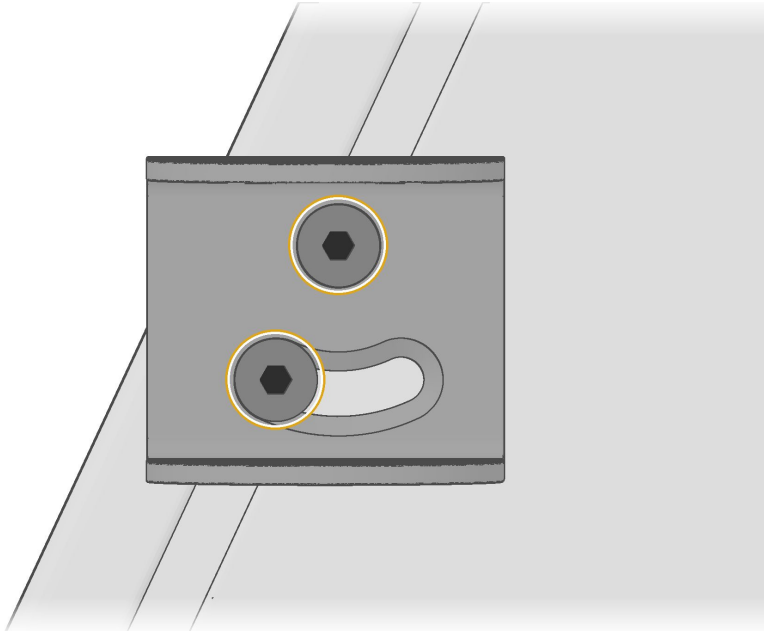

On the angled Elite upright, the lower screw sits towards one end of the curved slot. Keep both screws in the same profile groove and the bracket wings horizontal.

TIGHTEN BOTH FRAME SCREWS

The slot position mirrors on the opposite side. Hold the bracket level, tighten both M6 screws and check the level again before fitting the arm.

SIMGASM B.V. Copyright

04 FIT THE PROFILE ARM

The arm pivots between the two horizontal wings of the U-bracket.

ALIGN THE ARM AND T-NUTS

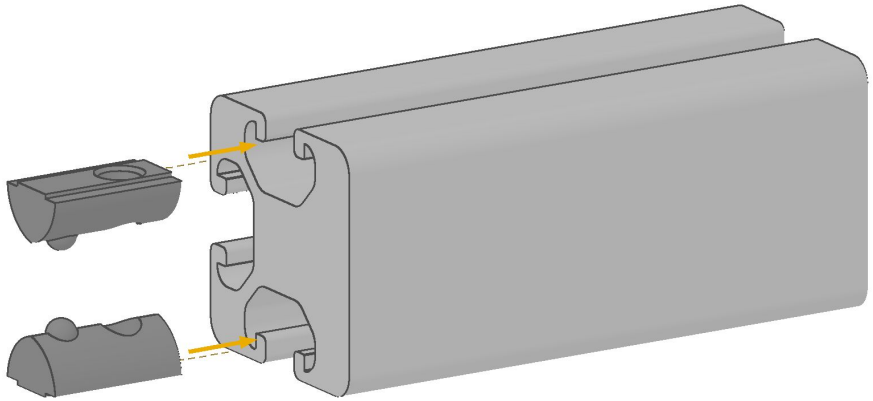

Place one M8 T-nut in the top groove of the arm and one in the bottom groove. Slide the arm between the U-bracket wings and line up both nuts with the pivot holes.

FIT BOTH PIVOT SCREWS

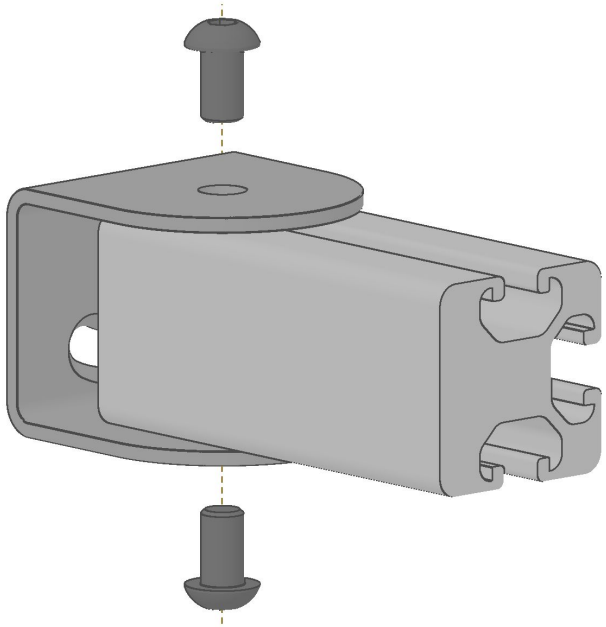

Start one M8 × 14 mm screw from above and one from below. Thread each into its T-nut so both button heads seat directly on the outside faces of the U-bracket.

CHECK THE SWIVEL

Support the free end and tighten the pivot screws evenly. Check that the arm can swing from side to side without rocking.

SIMGASM B.V. Copyright

05 MOUNT THE KEYBOARD TRAY

The two round holes in the narrow mounting flange line up with the top groove of the arm.

ALIGN THE TWO T-NUTS

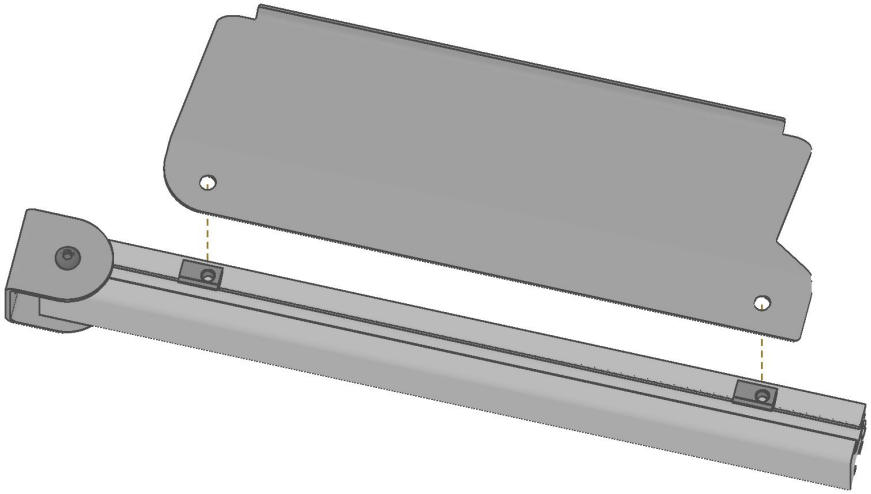

Place the two remaining M8 T-nuts in the top groove. Set the tray flange on the arm with the retaining lip towards the seat. Line up one T-nut under each round hole.

FASTEN THE TRAY

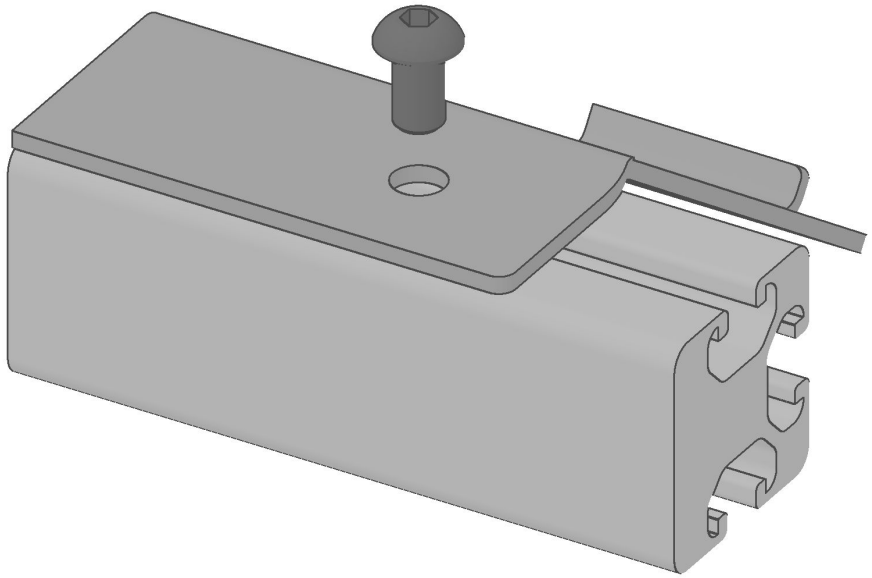

Start two M8 × 14 mm button-head screws from above, directly on the flange. Set the tray position and tighten evenly. The tray must clamp firmly before a screw reaches the groove floor.

TYPING ANGLE

The arm and mounting flange should be horizontal. The keyboard surface has its own built-in slope.

SIMGASM B.V. Copyright

06 FIT THE END CAP AND CHECK THE MOUNT

Finish the exposed end of the arm, then check the full swing before placing your keyboard.

PRESS IN THE END CAP

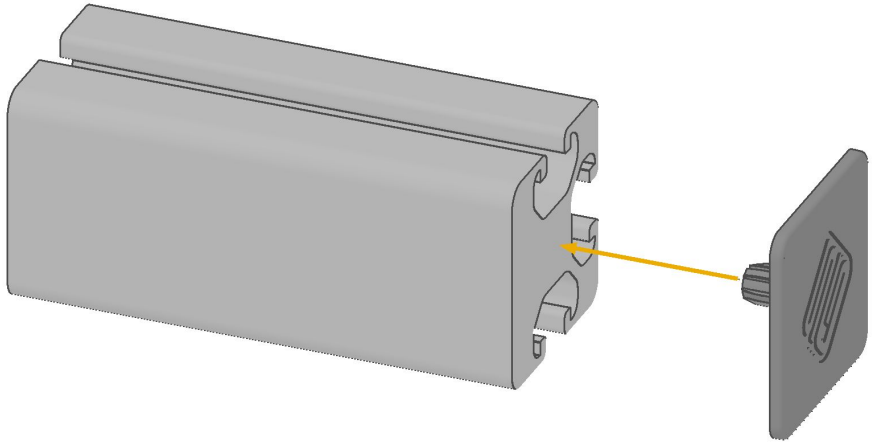

Align the split centre pin with the bore at the end of the arm. Press the cap in squarely by hand until its edge sits flush against the profile.

CHECK THE ARM SWING

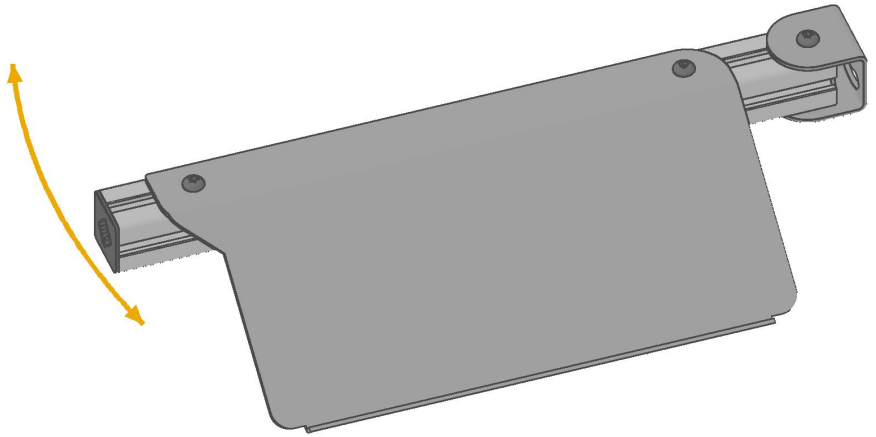

From your seating position, swing the arm out and bring it back into reach. Check that the tray stays steady and clears the seat, wheel and frame throughout its travel.

FINAL CHECK

Check both M6 frame screws, both pivot screws and both tray screws. Set your keyboard on the tray once the mount is secure.

SIMGASM B.V. Copyright

THANK YOU FOR YOUR PURCHASE

You might also like these accessories for your simulator.

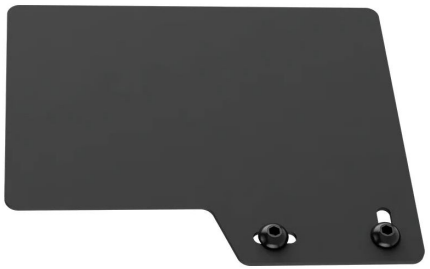

Mouse Tray

Keep your mouse beside the driver's seat.

View product

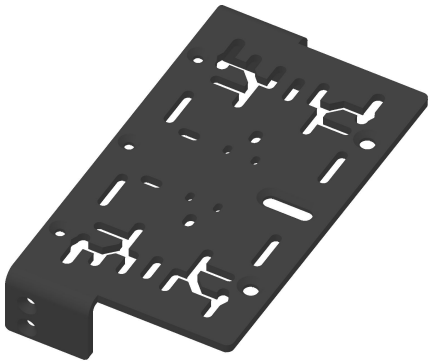

Shifter Plate

Mount a shifter beside your seat.

View product



Caster Wheel Set

Move your cockpit when you need the space.

View product



Accessories Hook

Hang your headphones on a cockpit profile.

View product

Explore more accessories at: simgasm.com/collections/sim-racing-accessories

SIMGASM B.V. Copyright